modular

Kunde _____ Menge _____

Projekt _____ Lage _____

FUN 700



Modell: F70/70LA/T **Cod:** MP01692143000

Technische Daten

Modularer Aufbau:	Top
Abmessungen (mm):	700x700x300
Nr. Becken:	1
Liter Becken 1:	40
Becken Abmessungen 1 (mm):	500x400x200
Heißwasserbefüllung:	1/2"
Kaltwasserbefüllung:	1/2"
Wasserablauf:	1" 1/2
Nettovolumen (m3):	0,147
Verpackungsabmessungen (mm):	776x776x636
Bruttogewicht (kg):	23
Bruttovolumen (m3):	0,383

Eigenschaften

Platte:	Aus Edelstahl AISI 304 mit Dicke 10/10 mm

In order to constantly offer the best possible products we reserve the right to make changes on technical specifications without incurring any obligation for equipment previosly or subsequently sold.

Technische Zeichnung

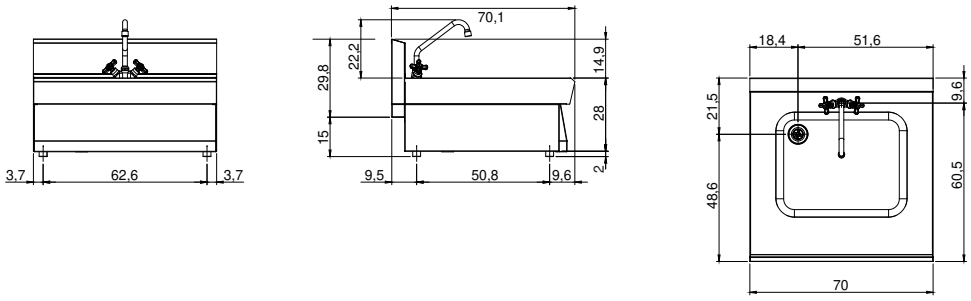

In order to constantly offer the best possible products we reserve the right to make changes on technical specifications without incurring any obligation for equipment previosly or subsequently sold.