modular



Kunde _____ Menge _____

Projekt _____ Lage _____

FUN 700

Modell: F70/40PLN/A **Cod:** MP01732143010

Technische Daten

Modularer Aufbau:	Auf offenem Schrank
Abmessungen (mm):	400x700x850
Nettovolumen (m3):	0,238
Verpackungsabmessungen (mm):	477x776x1147
Bruttogewicht (kg):	46
Bruttovolumen (m3):	0,425

Eigenschaften

Platte:	Aus Edelstahl AISI 304 mit Dicke 10/10 mm

In order to constantly offer the best possible products we reserve the right to make changes on technical specifications without incurring any obligation for equipment previosly or subsequently sold.

Neutral Element, auf offenem Schrank

Technische Zeichnung

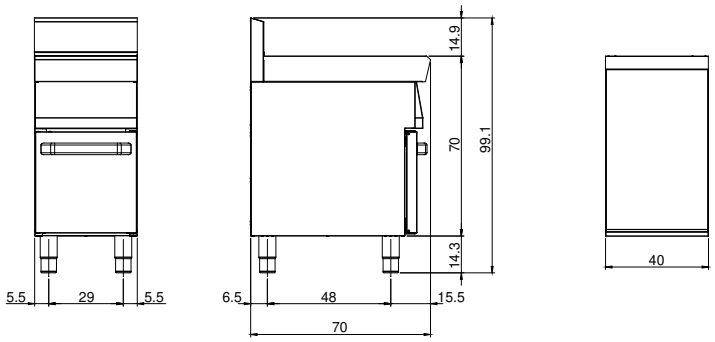

In order to constantly offer the best possible products we reserve the right to make changes on technical specifications without incurring any obligation for equipment previosly or subsequently sold.